RoHS

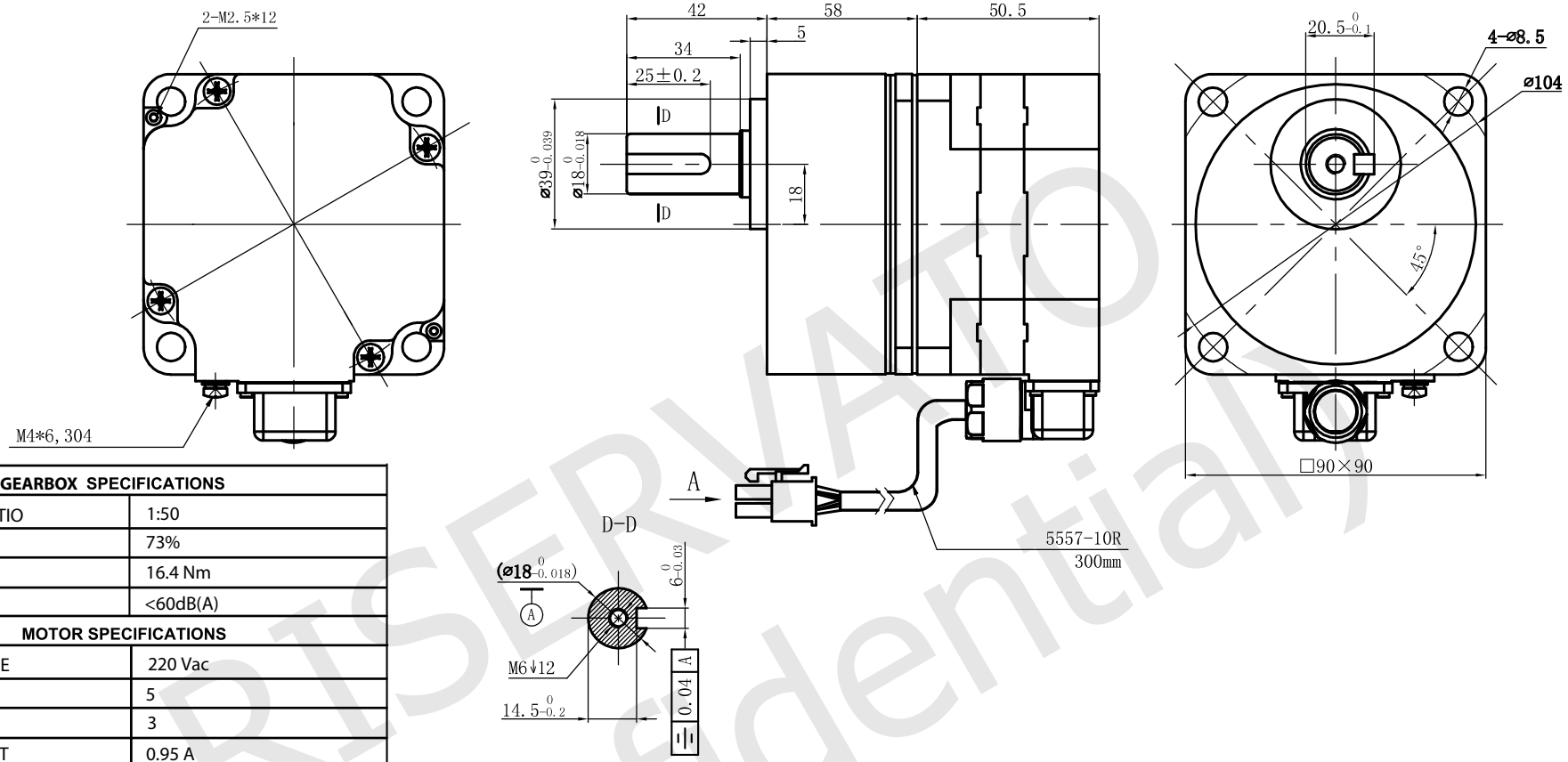

GEARBOX SPECIFICATIONS	
REDUCTION RATIO	1:50
EFFICIENCY	73%
RATED TORQUE	16.4 Nm
NOISE	<60dB(A)
MOTOR SPECIFICATIONS	
RATED VOLTAGE	220 Vac
POLE PAIRS	5
PHASES	3
RATED CURRENT	0.95 A
PEAK CURRENT	--- A
RATED POWER	120 W
RATED TORQUE	0.382 Nm
PEAK TORQUE	--- Nm
RATED SPEED	3000 rpm ±10%
NO LOAD SPEED	4000 rpm ±10%
INSULATION CLASS	Class B, 130°C
IP CODE	IP54
DIELECTRIC STRENGTH	1800 V/S
INSULATION RESISTANCE	>50Mohm
LINE TO LINE RESISTANCE	--- ohm ±10%
LINE TO LINE INDUCTANCE	--- mH ±20%
ROTOR INERTIA	--- kg.cm²
BACK EMF	--- Vrms/Krpm
OPERATING TEMPERATURE	-10°C ~ +40°C
STORAGE TEMPERATURE	-20°C ~ +70°C
WEIGHT	--- g. approx

WIRING DIAGRAM

1	2	3	4	5	6	7	8	9	10
Blue	Yellow	Yellow	Green	Green	Blue	—	—	Red	Black
W	Hu	U	Hv	V	Hw	—	PE	Vcc +5V	GND

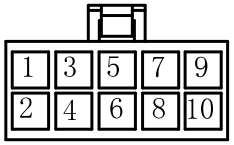

Lead wires 300 mm length

LABEL

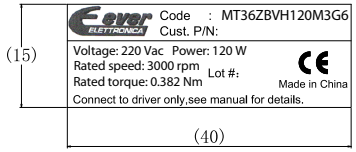

YYWWXXXXX (25 x 8)

Stator barcode label

UNIT: mm
UNLESS OTHERWISE SPECIFIED TOLERANCES
DIMENSIONS : ±0.3 mm DEGREES : ±5%
ORTHOGRAPHIC PROJECTION

DRAWING NOT TO SCALE

DESIGN	Stm02579-00b
CHECK	
APPROVED	
DATE	14 / 03 / 2023

REV	
	00 - First release.
	00b - Fixed the pinout connection in the wiring diagram.

MT36ZBVH120M3G6

DC BRUSHLESS MOTOR SPECIFICATION

ever ELETTRONICA
the clever drive
www.everelettronica.it

RISERVATO (Confidential)