RoHS

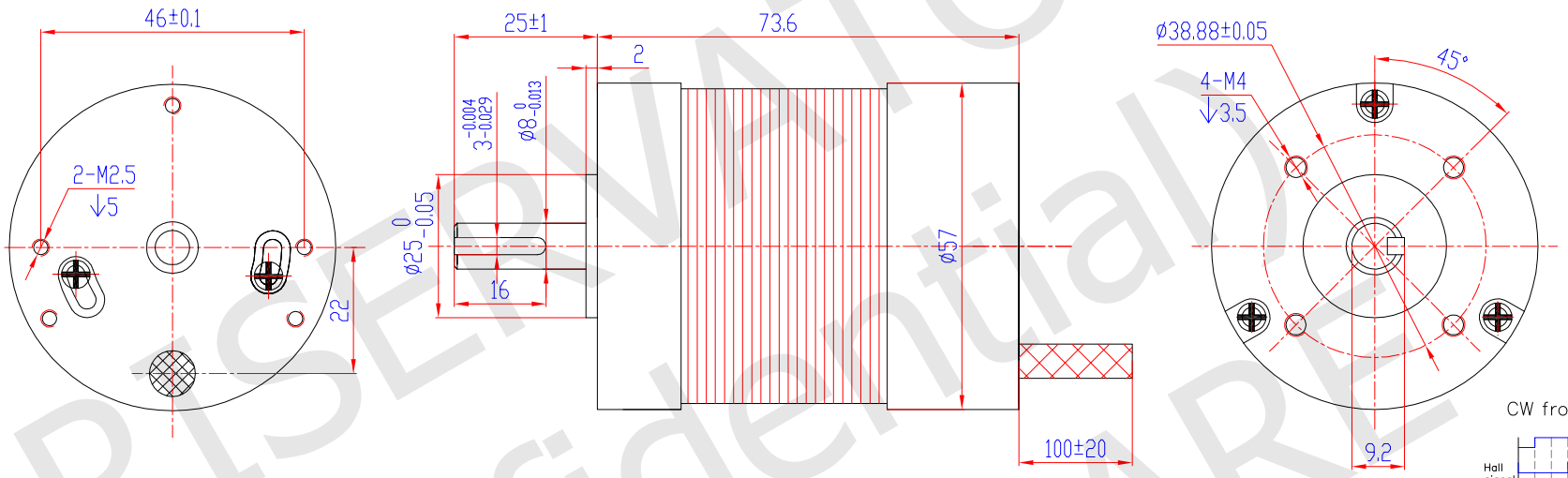

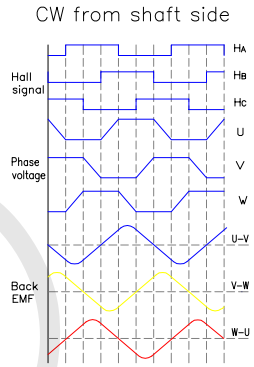

MOTOR SPECIFICATIONS	
RATED VOLTAGE	36 Vdc
POLES	4
PHASES	3
RATED CURRENT	3.67 A
PEAK CURRENT	11.0 A
RATED POWER	92 W
RATED TORQUE	0.22 Nm
PEAK TORQUE	0.66 Nm
TORQUE CONSTANT	0.06 Nm/A
RATED SPEED	4000 rpm ±10%
NO LOAD SPEED	5400 rpm ±10%
INSULATION CLASS	Class B, 130°C
IP CODE	IP20
DIELECTRIC STRENGTH	650 Vac / 1 s
INSULATION RESISTANCE	100 Mohm / 500Vdc
LINE TO LINE RESISTANCE	0.64 ohm ±0.1
LINE TO LINE INDUCTANCE	2.00 mH ±20%
ROTOR INERTIA	119 g.cm²
BACK EMF	4.45 Vrms/Krpm
OPERATING TEMPERATURE	-20°C ~ +50°C
STORAGE TEMPERATURE	---
WEIGHT	720 g. approx
MAX SHAFT AXIAL LOAD	15 N
MAX SHAFT RADIAL LOAD	75 N @ 20 mm from flange

WIRING DIAGRAM

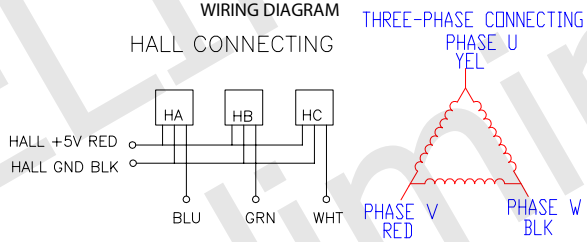

LABELS

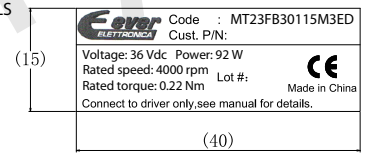

YYWWXXXXX (25 x 8)

Stator barcode label

UNIT: mm		DESIGN	Stm00784-01b
UNLESS OTHERWISE SPECIFIED TOLERANCES		CHECK	
DIMENSIONS : ±0.3 mm	DEGREES : ±5%	APPROVED	
DRAWING NOT TO SCALE		DATE	05 / 01 / 2021
REV	01b - Added a key on front shaft.		

MT23FB30115M3ED

DC BRUSHLESS MOTOR SPECIFICATION

Ever ELETTRONICA

the clever drive

www.everelettronica.it

RISERVATO (Confidential) PRELIMINARE (Preliminary)